Husqvarna®

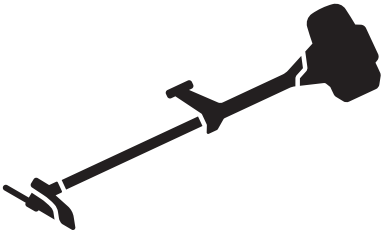

531RS, 541RS, 541RST

EN Operator's manual 2-26

Contents

Introduction.....2
Safety.....4
Assembly.....10
Operation.....14
Maintenance.....18
Troubleshooting.....22
Transportation and storage.....23
Technical data.....24
Accessories.....25
Declaration of Conformity.....26
Appendix.....27

Introduction

Product description

This product is a grass trimmer/brushcutter with a combustion engine.

Work is constantly in progress to increase your safety and efficiency during operation. Speak to your servicing dealer for more information.

Intended use

The product can be used with a grass blade or a trimmer head to cut different types of vegetation. Do not use the product for other tasks than grass trimming and grass clearing. Use a grass blade or trimmer head to cut grass.

Note: National or local regulations may regulate the use. Comply to given regulations.

Product overview

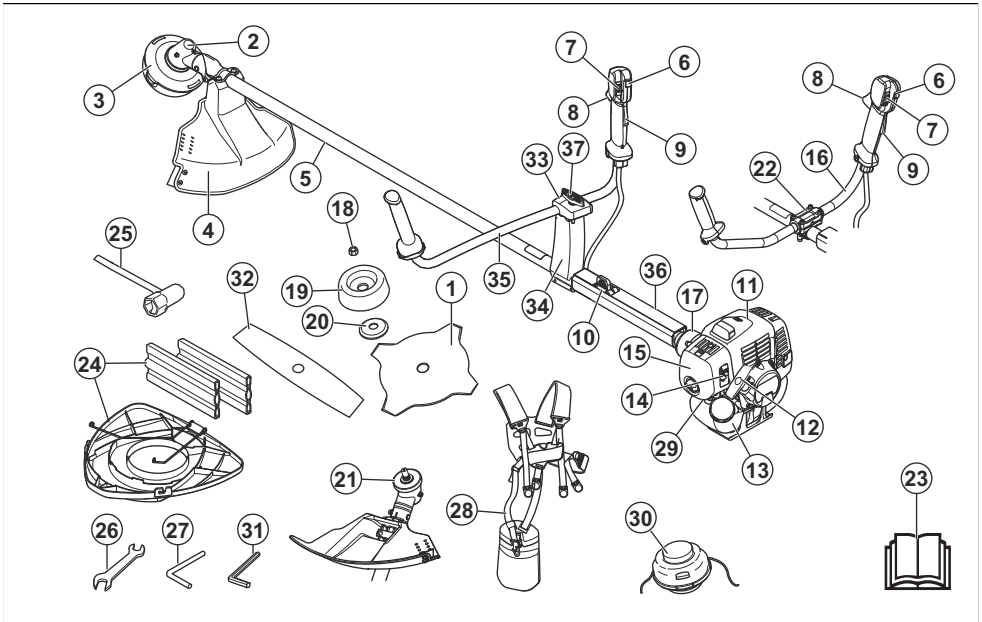

1. Blade (not for all markets)
2. Grease filler cap, bevel gear
3. Bevel gear
4. Cutting attachment guard
5. Shaft
6. Start throttle button
7. Stop switch
8. Throttle control

9. Throttle lockout
10. Suspension ring
11. Cylinder cover
12. Starter rope handle
13. Fuel tank
14. Choke control
15. Air filter cover
16. Handlebar (531RS, 541RS)
17. Clutch cover
18. Locknut
19. Support cup
20. Support flange
21. Drive disc
22. Handlebar clamp (531RS, 541RS)
23. Operator's manual
24. Transport guard (not for all markets)
25. Socket wrench
26. Wrench
27. Locking pin (for products without hex key)
28. Harness
29. Air purge bulb
30. Trimmer head (not for all markets)
31. Hex key
32. 2-teeth blade (not for all markets)
33. Cover (541RST)
34. Bracket (541RST)
35. Handlebar (541RST)
36. Protective sleeve
37. Knob (541RST)

Symbols on the product

WARNING: This product can be dangerous and cause serious injury or death to the operator or others. Be careful and use the product correctly.

Read the operator's manual carefully and make sure that you understand the instructions before use.

Use a protective helmet in locations where objects can fall on you. Use approved hearing protection and approved eye protection.

Maximum speed of the output shaft.

The product can cause objects to eject, which can cause injury.

Keep a minimum distance of 15 m / 50 ft. to persons and animals during operation of the product.

Risk of blade thrust if the cutting equipment touches an object that it does not immediately cut. The product can cut off body parts. Keep a minimum of 15 m / 50 ft. distance to persons and animals during operation of the product.

The arrows shows the limit for the handle position.

Choke.

Air purge bulb.

Use approved protective gloves.

Use heavy-duty slip-resistant boots.

Noise emission to the environment refer to the European Community's Directive. The emission of the product is specified in *Technical data on page 24* and on the label.

yyyywwxxxx

The rating plate shows the serial number. **yyyy** is the production year and **ww** is the production week.

Note: Other symbols/decals on the product refer to certification requirements for other commercial areas.

Product damage

We are not responsible for damages to our product if:

- the product is incorrectly repaired.
- the product is repaired with parts that are not from the manufacturer or not approved by the manufacturer.
- the product has an accessory that is not from the manufacturer or not approved by the manufacturer.

- the product is not repaired at an approved service center or by an approved authority.

Safety

Safety definitions

The definitions below give the level of severity for each signal word.

WARNING: Injury to persons.

CAUTION: Damage to the product.

Note: This information makes the product easier to use.

General safety instructions

WARNING: Read the warning instructions that follow before you use the product.

- Use the product correctly. Injury or death is a possible result of incorrect use. Only use the product for the tasks found in this manual. Do not use the product for other tasks.
- Obey the instructions in this manual. Obey the safety symbols and the safety instructions. If the operator does not obey the instructions and the symbols, injury, damage or death is a possible result.
- Do not discard this manual. Use the instructions to assemble, to operate and to keep your product in good condition. Use the instructions for correct installation of attachments and accessories. Only use approved attachments and accessories.
- Do not use a damaged product. Obey the maintenance schedule. Only do the maintenance work that you find an instruction about in this manual. An approved service center must do all other maintenance work.
- This manual cannot include all situations that can occur when you use the product. Be careful and use your common sense. Do not operate the product or do maintenance on the product if you are not sure about of the situation. Speak to a product expert, your dealer, service agent or approved service center for information.
- Disconnect the spark plug cable before you assemble the product, put the product into storage or do maintenance.
- Do not use the product if it is changed from its initial specification. Do not change a part of the product without approval from the manufacturer. Only use parts approved by the manufacturer. Injury or death is a possible result of incorrect maintenance.
- Do not breathe in the fumes from the engine. Long-term inhalation of the engine's exhaust fumes is a health risk.
- Do not start the product indoors or near flammable material. The exhaust fumes are hot and can contain a spark which can start a fire. Not sufficient airflow can cause injury or death because of asphyxiation or carbon monoxide.
- When you use this product the engine makes an electromagnetic field. The electromagnetic field can cause damage to medical implants. Speak to your physician and medical implant manufacturer before you operate the product.
- Do not let a child operate the product. Do not let a person without knowledge of the instructions operate the product.
- Make sure that you always monitor a person, with decreased physical capacity or mental capacity, that uses the product. A responsible adult must be there at all times.
- Lock the product in an area that children and unapproved persons cannot access.
- The product can eject objects and cause injuries. Obey the safety instructions to decrease the risk of injury or death.
- Do not go away from the product when the engine is on.
- The operator of the product is responsible if an accident occurs.
- Make sure that parts are not damaged before you use the product.
- Make sure that you are at minimum 15 m (50 ft) away from other persons or animals before you use the product. Make sure that persons in the adjacent area know that you will use the product.
- Refer to national or local laws. They can prevent or decrease the operation of the product in some conditions.
- Do not use the product if you are fatigued or influenced by alcohol, drugs or medicine. They can have effects on your vision, alertness, coordination or judgment.

Safety instructions for assembly

WARNING: Read the warning instructions that follow before you use the product.

- Use approved protective gloves when you assemble the product and cutting attachment.

- Remove the spark plug cap from the spark plug before you assemble the product.
- Make sure that the correct handlebar and cutting attachment guard are assembled before you operate the product.
- A damaged or incorrect cutting attachment guard can cause injury. Do not use a cutting attachment without an approved cutting attachment guard.
- Attach the clutch cover and shaft correctly before you start the product.
- The drive disc and support flange must engage correctly in the center hole of the cutting attachment. A cutting attachment that is attached incorrectly can cause injury or death.
- Attach the harness to the product to prevent injury to the operator or others.

Safety instructions for operation

- Make sure the product is fully assembled before you use it.
- Before a start, move the product 3 m (10 ft) away from the position where you filled the fuel tank. Put the product on a flat surface. Make sure that the cutting attachment does not touch the ground or other objects.
- The product can cause objects to eject, which can cause damage to the eyes. Always use an approved eye protection when you operate the product.
- Be careful, a child can come near the product without your knowledge during operation.
- Do not operate the product if there are persons in the work area. Stop the product if a person goes into the work area.
- Make sure that you are always in control of the product.
- Do not use the product if you cannot receive aid if an accident occurs. Always make sure others know you will operate the product before you start to operate the product.
- Do not turn with the product before you make sure that no persons or animals are in the safety area.
- Remove all unwanted materials from the work area before you start. If the cutting attachment hits an object, the object can eject and cause injury or damage. Unwanted material can wind around the cutting attachment and cause damage.
- Do not use the product in bad weather (fog, rain, strong winds, risk of lightning or other weather conditions.). Dangerous conditions (such as slippery surfaces) can occur because of bad weather.
- Make sure that you can move freely and work in a stable position.

- Make sure that you cannot fall when you use the product. Do not tilt when you operate the product.
- Always hold the product with your two hands. Hold the product on the right side of your body.

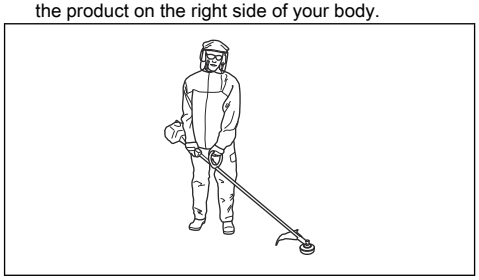

- Operate the product with the cutting attachment below your waist.
- If the choke control is in the choke position when the engine starts, the cutting attachment starts to turn.
- Do not touch the bevel gear after the engine stops. The bevel gear is hot after the engine stops. Hot areas can cause injury.
- Stop the engine before you move the product.
- Do not put down the product with the engine on.
- Before you remove the unwanted materials from the product, stop the engine and wait until the cutting attachment stops. Let the cutting attachment stop before you or an aid remove the cut material.

Personal protective equipment

WARNING: Read the warning instructions that follow before you use the product.

- Always use correct personal protective equipment when you operate the product. The personal protective equipment does not erase the risk of injury. The personal protective equipment decreases the grade of injury if an accident occurs.
- Always use an approved eye protection while you operate the product.
- Do not operate the product with bare feet or with open shoes. Always use heavy-duty slip-resistant boots.
- Use heavy, long pants.
- If it is necessary, use approved protective gloves.

- Use a helmet if it is possible that objects fall on your head.
- Always use approved ear protection while you operate the product. Noise for a long period can cause noise-induced hearing loss.
- Make sure that you have a first aid kit near.

Protective devices on the product

- Make sure that you regularly do the maintenance to the product.
  - The life of the product increases.
  - The risk of accidents decreases.

  Let an approved dealer or an approved service center regularly examine the product to do adjustments or repairs.
- Do not use a product with damaged protective equipment. If the product is damaged, speak to an approved service center.

To do a check of the throttle trigger lockout

1. Make sure that the throttle trigger lockout (A) and throttle trigger (B) move freely and that the return spring operates correctly.

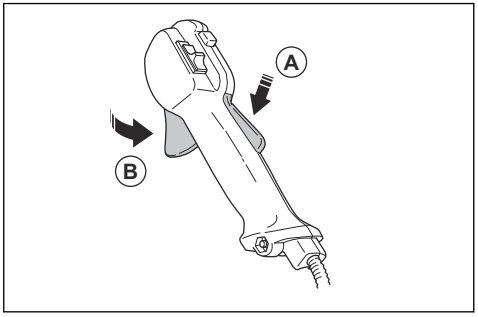

2. Push down the throttle trigger lockout and make sure that it goes back to its initial position when you release it.

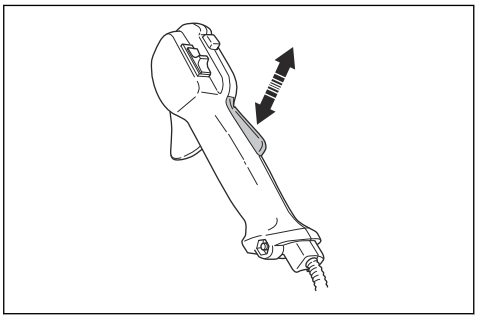

3. Make sure that the throttle trigger is locked at the idle position when the throttle trigger lockout is released.

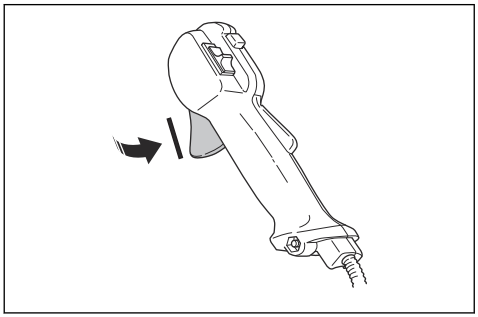

4. Start the product and apply full throttle.
5. Release the throttle trigger and make sure that the cutting attachment stops and stays stationary.

WARNING: If the cutting attachment moves when the throttle trigger is in the idle position, then the carburetor idle speed must be adjusted. Refer to *To adjust the idle speed on page 20*.

To do a check of the stop switch

1. Start the engine.
2. Move the stop switch to the stop position and make sure that the engine stops.

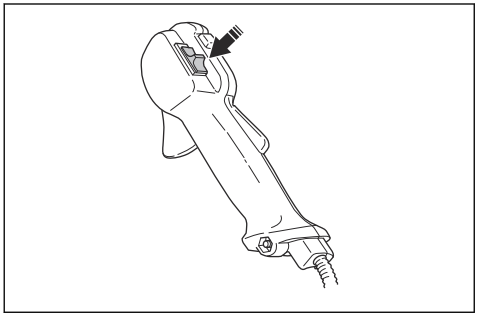

To do a check of the cutting attachment guard

The cutting attachment guard stops objects that ejects in the direction of the operator. It also prevents injuries that occur if you touch the cutting attachment.

1. Stop the engine.

2. Do a visual check for damages, for example cracks.

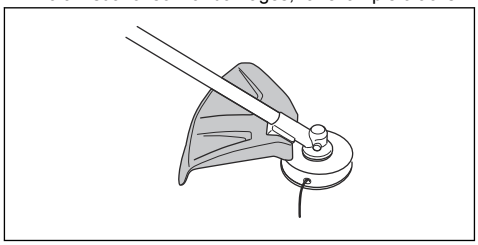

3. Replace the cutting attachment guard if it is damaged.

To do a check of the vibration damping system

The vibration damping system decreases vibration in the handles to a minimum which makes the operation easier.

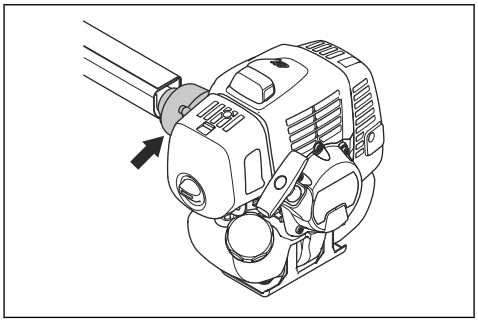

1. Stop the engine.
2. Do a visual check for deformation and damage, for example cracks.
3. Make sure that the elements of the vibration damping system are attached correctly.

To do a check of the quick-release mechanism

WARNING: Do not use a harness with a quick-release mechanism that does not operate correctly.

The quick-release mechanism lets the operator remove the product quickly from the harness if there is an emergency.

1. Stop the engine.
2. Do a visual check for damage, for example cracks.
3. Release and attach the quick-release mechanism to make sure that it operates correctly.

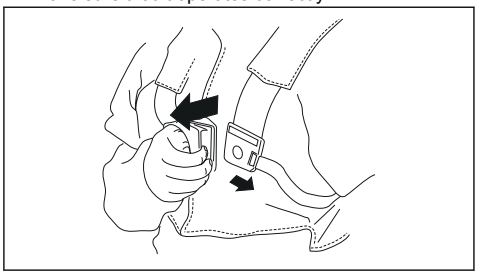

To do a check of the muffler

WARNING: Never use a product with a faulty muffler.

WARNING: Bear in mind that the exhaust fumes from the engine are hot and may contain sparks which can start a fire. Never start the product indoors or near combustible material!

The muffler keeps noise levels to a minimum and sends exhaust fumes away from the operator. For mufflers it is very important that you follow the instructions on how to check, maintain and service your product.

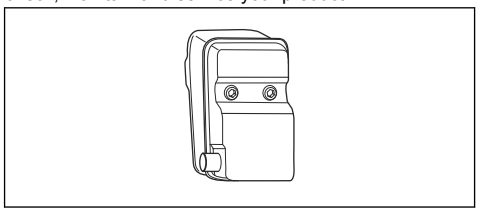

Regularly check that the muffler is securely attached to the product.

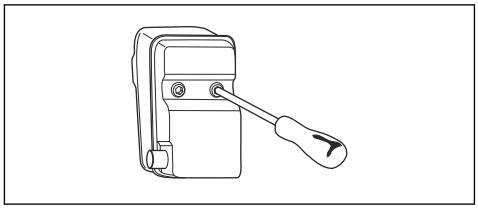

To attach and remove the locknut

WARNING: Stop the engine, use protective gloves and be careful around the sharp edges of the cutting attachment.

A locknut is used to attach some types of cutting attachments. The locknut has a left thread.

- To attach, tighten the locknut in the opposite direction to the direction of turning of the cutting attachment.
- To remove the locknut, loosen the locknut in the same direction as the cutting attachment rotates.
- To loosen and tighten the locknut, use a socket wrench with a long shaft. The arrow in the picture shows the area where you can operate the socket wrench.

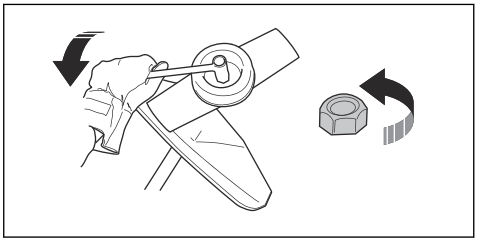

WARNING: When you loosen and tighten the locknut, there is a risk of injury from the blade. You must always make sure that the blade guard prevents injury to your hand when you do this.

Note: Make sure that you can not turn the locknut by hand. Replace the nut if the nylon lining does not have a resistance of a minimum of 1.5 Nm. The locknut must be replaced after it has been put on approximately 10 times.

Cutting equipment

Choose and maintain the cutting equipment to:

- Obtain maximum cutting performance.
- Increase life span of the cutting equipment.
- Follow the checking, maintenance and service instructions for the muffler.
- Always use the recommended guard for the cutting equipment. See Technical data.

WARNING: Only use cutting attachments with the guards we recommend! See the chapter on Technical data. Refer to the instructions for the cutting attachment to check the correct way to load the trimmer line and the correct trimmer line diameter.

WARNING: A faulty cutting attachment may increase the risk of accidents.

WARNING: Always stop the engine before doing any work on the cutting attachment. This continues to rotate even after the throttle has been released. Ensure that the cutting attachment has stopped completely and disconnect the spark plug cap before you start to work on it.

Cutting equipment

- Use the blades and grass knives to cut thick grass.

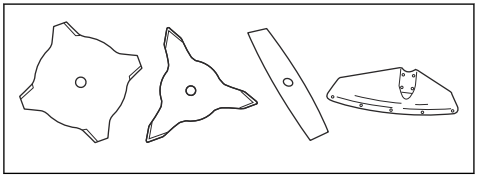

- Use the trimmer head to cut grass.

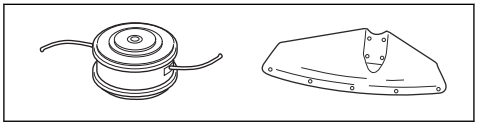

- An incorrectly sharpened or damaged blade increases the risk of accidents. Keep the teeth of the blade correctly sharpened. Follow the instructions in *Maintenance on page 18* and use the recommended file gauge.

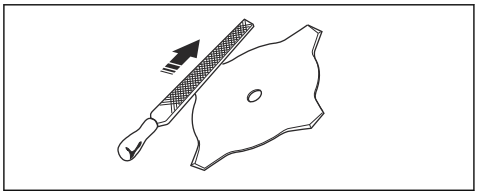

- Examine the cutting attachment for damage and cracks. Replace the damaged cutting attachment.
- Only use cutting attachments with recommended cutting attachment guards. Refer to *Accessories on page 25*.

Trimmer head

WARNING: Always make sure that the trimmer line is wound tightly and equally around the drum to prevent harmful vibration.

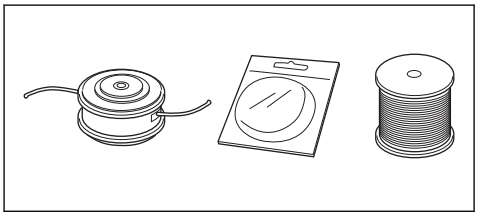

- Only use recommended cutting attachments.
- The length of the trimmer line is important. For a longer trimmer line, more engine power is necessary than for a shorter trimmer line of the same diameter.
- Do not move the installation position of the trimmer guard.
- Make sure that the cutter on the trimmer guard is not damaged. The cutter cuts the trimmer line to the correct length.
- Soak the trimmer line for 2 days before use, to increase its life length.

Grass blades and grass cutters

- Use the product with an approved grass blade. Do not use a grass blade without proper installation of all required parts. Make sure that the installation is done correctly and that the proper parts are used. Improper installation may cause the blade to fly off and seriously injure the operator or the bystanders.
- Wear protective gloves when you handle or do maintenance on the blade.
- Use head protection when you operate a product with a grass blade.
- Grass blades and grass cutters are used to cut rough grass.
- A grass blade can cause injury while it continues to spin after the engine is stopped or the throttle trigger is released. Make sure that the grass blade has completely stopped rotating before any maintenance.
- Stop the engine before you do work on the cutting attachment. Make sure the cutting attachment fully stops. Disconnect the lead from the spark plug.
- Only use an approved cutting attachment or a correctly sharpened blade.
- Keep the teeth of the blade correctly sharpened.
- Do not use a damaged cutting attachment.
- Attach the transport guard to the grass blade when you transport or store the product.

Blade thrust

- A blade thrust is a sudden movement of the product to the side, forward or rearward. A blade thrust occurs when the grass blade hits an object that cannot be cut. In areas where it is not easy to see the material being cut the risk of blade thrust increases.
- When a blade thrust occurs, there is a risk that the product or the operator moves out of position. A blade that moves can hit bystanders and there is a risk of injuries.
- If a blade is bent, has cracks, is broken or damaged, discard the blade.
- Use a sharp blade. The risk of blade thrust increases when a blade is not sharp.

Fuel safety

- Do not start the product if there is fuel or engine oil on the product. Remove the unwanted fuel/oil and let the product dry. Remove unwanted fuel from the product.
- If you spill fuel on your clothing, change clothing immediately.
- Do not get fuel on your body, it can cause injury. If you get fuel on your body, use a soap and water to remove the fuel.
- Do not start the engine if you spill oil or fuel on the product or on your body.
- Do not start the product if the engine has a leak. Examine the engine for leaks regularly.
- Be careful with fuel. Fuel is flammable and the fumes are explosive and can cause injuries or death.
- Do not breathe in the fuel fumes, it can cause injury. Make sure that there is a sufficient airflow.
- Do not smoke near the fuel or the engine.
- Do not put warm objects near the fuel or the engine.
- Do not add the fuel when the engine is on.
- Make sure that the engine is cool before you refuel.
- Before you refuel, open the fuel tank cap slowly and release the pressure carefully.
- Do not add fuel to the engine in an indoor area. Not sufficient airflow can cause injury or death because of asphyxiation or carbon monoxide.
- Tighten the fuel tank cap carefully or a fire can occur.
- Move the product at a minimum of 3 m (10 ft) from the position where you filled the tank before a start.
- Do not put too much fuel in the fuel tank.
- Make sure that a leak cannot occur when you move the product or fuel container.
- Do not put the product or a fuel container where there is an open flame, spark or pilot light. Make sure that the storage area does not contain an open flame.
- Only use approved containers when you move the fuel or put the fuel into storage.

- Empty the fuel tank before long-term storage. Obey the local law on where to dispose fuel.
- Clean the product before long-term storage.
- Remove the spark plug cable before you put the product into storage to make sure that the engine does not start accidentally.

Safety instructions for maintenance

- If you cannot adjust the idle speed to make the cutting attachment stop, speak to your service center. Do not use the product until the product is correctly adjusted or repaired.

Assembly

WARNING: Read the safety chapter before you assemble the product.

To install the body of the product

- Attach the engine (A) to the tube (B) with 4 screws (C).

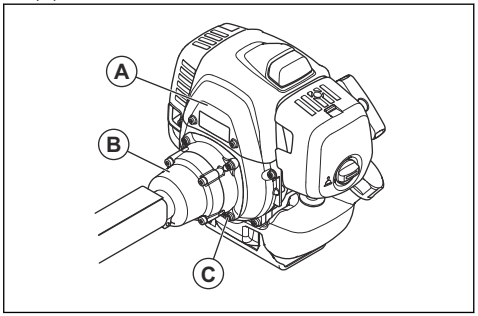

To install the handlebar(531RS, 541RS)

1. Install the handlebar in the handlebar clamp on the shaft.

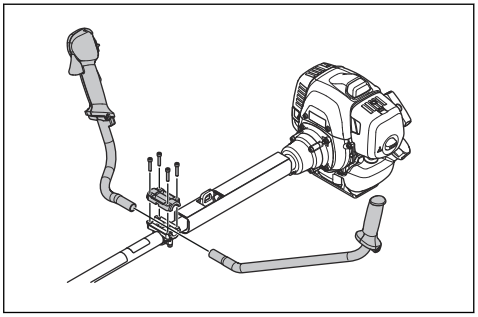

2. Install the protective sleeve.

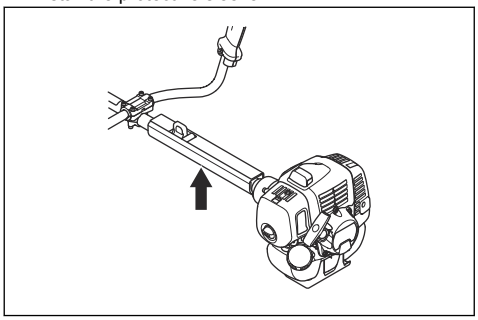

To install the handlebar (541RST)

1. Remove the screw behind the throttle handle.

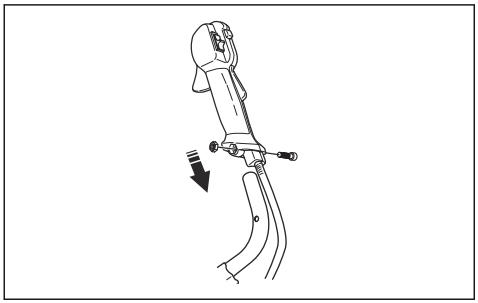

2. Install the throttle handle to the right handlebar.
3. Align the hole behind the throttle handle with the hole in the handlebar.
4. Put the screw through the holes. Tighten the screw.

5. Put the handlebar assembly and the square nut into the bracket. Make sure that the handlebar is in the correct position.

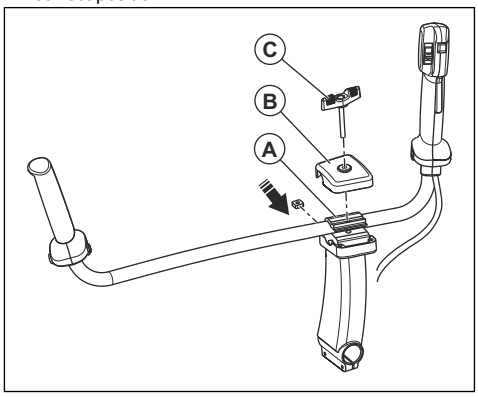

6. Install the handlebar clamp (A), cover (B) and knob (C).
7. Align the holes for the knob screw.
8. Tighten the knob to lock the handlebar tightly.

To install the harness

1. Put on the harness and hang the product from the suspension point.
2. Adjust the handle to put the product in a good work position.

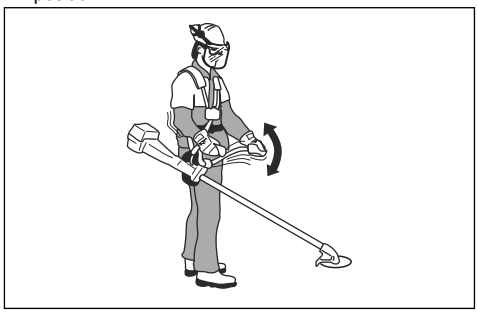

3. Tighten the screws fully.

To connect the throttle cable and stop switch wires

1. Remove the air filter cover.
2. Install the throttle cable (A) through the carburetor bracket (B).

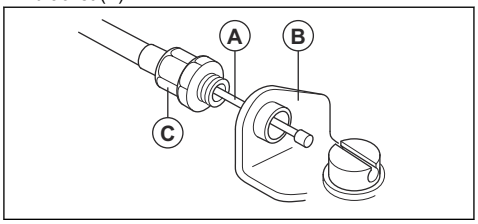

3. Turn the cable adjuster sleeve (C) into the carburetor bracket fully.
4. Put the slot fitting (D) on the carburetor. At this time, the recessed hole (E) for the cable lug (F) is away from the cable adjuster sleeve (C).

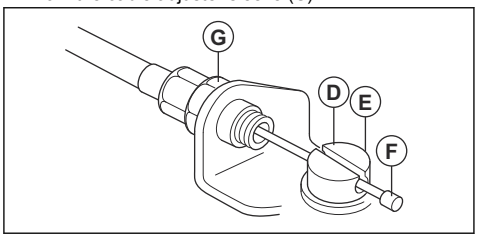

5. Rotate the carburetor throttle cam and move the throttle cable (A) through the slot in the slot fitting.
6. Make sure the cable lug (F) drops into the recessed hole.
7. Operate the throttle trigger some times to make sure that it operates correctly.
8. Adjust the cable adjuster sleeve (C).
   a) Make sure the stop on the carburetor throttle cam touches the throttle stop correctly.
   b) Make sure the cable position keeps 1-2 mm between cable lug (F) and slot fitting when the throttle trigger is fully released.

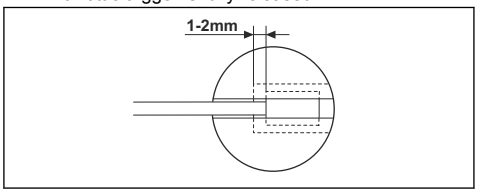

9. When the throttle cable (A) is adjusted correctly, tighten the locknut (G).

10. Connect the stop switch wires (H) with the connectors from the engine.

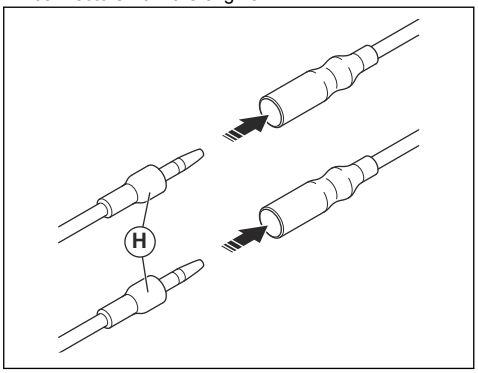

11. Install the dust cover (J).

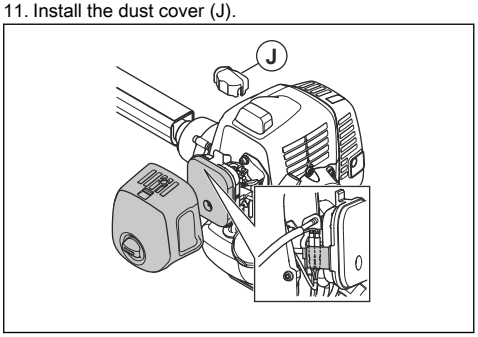

12. Install the air filter cover.

To install blades and trimmer heads

WARNING: Only use the approved guard for the blades. See *Accessories on page 25*. A damaged guard can cause injury.

WARNING: If you operate the product with a grass blade, first install the correct handlebar, blade guard and harness .

WARNING: If you do not install the the blades correctly, it can cause injury.

1. Make sure that the lifted section on the drive disc/ support flange engages correctly in the center hole of the blades.
2. Install the blades.

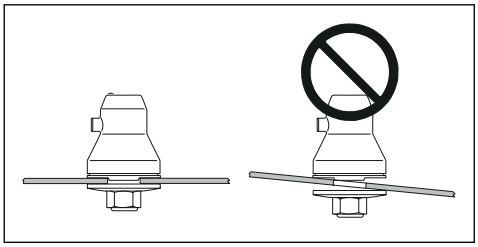

To install a blade guard and grass blade

CAUTION: Only use the approved guard for the blades. Refer to *Accessories on page 25*.

1. Attach the blade guard/cutting attachment guard (A) onto the shaft and tighten with the bolt (L).

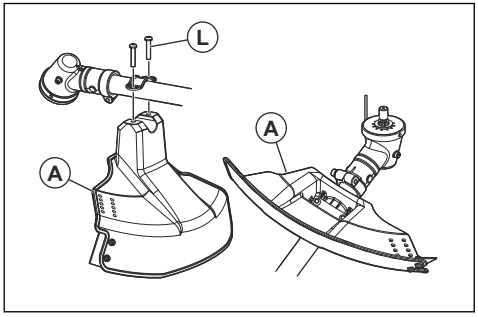

2. Install the drive disc (B) on the output shaft.

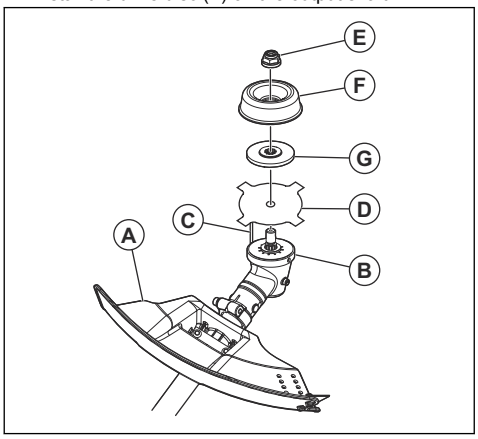

3. Turn the output shaft until 1 of the holes in the drive disc aligns with the related hole in the gear housing.
4. Put the locking pin or the hex key (C) in the hole to lock the shaft.
5. Put the blade (D), support flange (G) and support cup (F) on the output shaft.

6. Install the nut (E). Hold the shaft of the wrench near the blade guard. To tighten the nut, you must turn the wrench in the opposite direction of rotation. Tighten the nut to a torque of 35-50 Nm/3.5-5 kpm.

Note: Left hand thread.

To attach the trimmer guard and the trimmer head

WARNING: Use the correct trimmer guard for the correct trimmer head.

1. Attach the trimmer guard (A) to the shaft with the bolts (L).

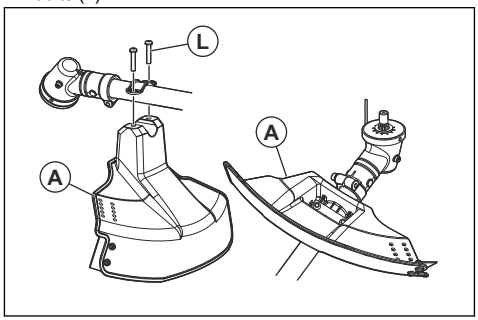

2. Attach the drive disc (B) and support flange (G) to the output shaft.

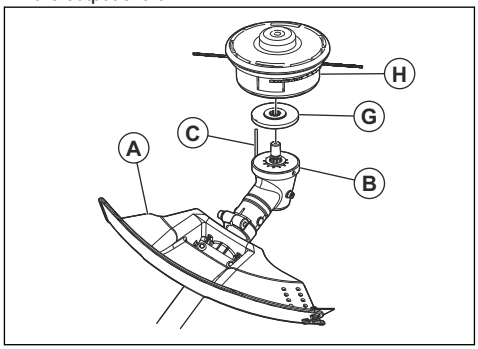

3. Turn the output shaft until the hole in the drive disc aligns with the hole in the gear housing.
4. Put the locking pin or the hex key (C) in the hole to lock the shaft.
5. Turn the trimmer head (H) counterclockwise.

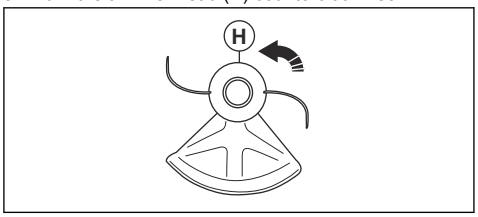

6. To disassemble, do the reverse procedure.

To install the transport guard

1. Install the blade in the transport guard (A).
2. Put the two fasteners (B) into the slots (C) to attach the transport guard.

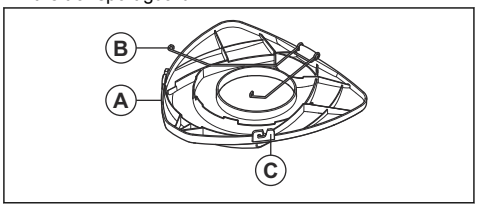

To install the 2-teeth blade in the guard

1. Install the blade in the transport guard.

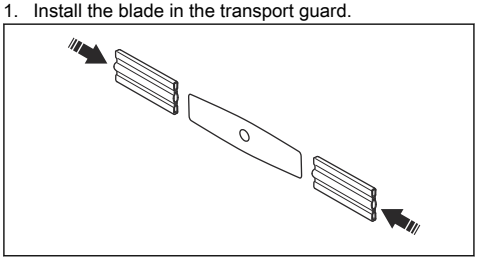

To adjust the harness

WARNING: The product must always be correctly attached to the harness. Do not use a damaged harness.

1. Put on the harness.
2. Connect the product to the harness.
3. Adjust the harness for the best work position.

4. Adjust the side straps to make the product weigh equally on your shoulders.

5. Adjust the harness until the cutting attachment is parallel to the ground.
6. Let the cutting attachment lightly touch the ground. Adjust the harness clamp to balance the product correctly.

Note: If you use a grass blade, it must balance approximately 10 cm /4 in above the ground.

Operation

WARNING: Read and understand the safety chapter before you operate the product.

Fuel

To use fuel

CAUTION: This product has a two-cycle engine. Use a mixture of gasoline and two-cycle engine oil. Make sure to use the correct quantity of oil in the mixture. Incorrect ratio of gasoline and oil can cause damage to the engine.

Gasoline

CAUTION: Do not use gasoline with an octane number less than 90 RON (87 AKI). This can cause damage to the product.

CAUTION: Do not use gasoline with more than 10% ethanol concentration (E10). This can cause damage to the product.

CAUTION: Do not use leaded gasoline. This can cause damage to the product.

- Always use new unleaded gasoline with a minimum octane number of 90 RON (87 AKI) and with less than 10% ethanol concentration (E10).
- Use gasoline with a higher octane number if you frequently use the product at continuously high engine speed.
- Always use a good quality unleaded gasoline/oil mixture.

Two-cycle engine oil

- Use only the two-cycle engine oil of high quality, especially HUSQVARNA two-cycle oil. Use only the oil of an air cooled engine.
- Mixture ratio 50:1 (2%).
- Oil of low quality and high oil/fuel ratio can decrease the lifetime of catalytic converters.
- Speak to your dealer when you select an oil.
- If Husqvarna two-stroke oil is not available, you can use another two-stroke oil of good quality that is intended for air cooled engines. Contact your dealer when you select oil.
- Do not use the two-stroke oil for water-cooled outboard engines. The two-stroke oil is sometimes referred to as outboard oil.

Gasoline, liter	Oil, liter
	2%(50:1)
5	0,1
10	0,2
15	0,3
20	0,4

To make the fuel mixture

Note: Always use a clean fuel container when you mix the fuel.

Note: Do not make more than 30 days quantity of fuel mixture.

1. Add half of the gasoline quantity.
2. Add the full quantity of oil.
3. Shake the fuel mixture to mix the contents.
4. Add the remaining gasoline quantity.
5. Shake the fuel mixture to mix the contents.

6. Fill the fuel tank.

To add fuel

WARNING: Do not smoke or put hot objects near fuel. Before you add fuel, stop the engine and let it cool for minutes.

WARNING: When you add fuel, open the fuel tank cap slowly to release unwanted pressure.

WARNING: After you add fuel, tighten the fuel tank cap carefully. Move the machine away from the refuelling area and the power before you start the engine.

- Always use a fuel container with an anti-spill valve.
- Make sure that the area near the fuel tank cap is clean. Contamination in the tank can cause operating problems.
- Shake the fuel container before you add the fuel mixture to the fuel tank.

To start and stop

To examine before start

1. Examine the product for missing, damaged, loose or worn parts.
2. Examine the nuts, screws and bolts.
3. Examine the blades.
4. Examine the locknut. Make sure that the locknut has a minimum locking force of 1.5 Nm (1,1 ft lb). Torque the locknut to 35-50 Nm (26-36 ft lb).
5. Examine the air filter.
6. Examine the throttle trigger lockout and the throttle control.
7. Examine the stop switch.
8. Examine the product for fuel leaks.

To start a cold engine

WARNING: Before you start the product, install the complete clutch cover and shaft. A loose clutch can cause injury. Use gloves.

WARNING: Move the product away from the refuelling area and the fuel source. Put it on a flat surface. Make sure that no objects touch the cutting attachment.

WARNING: Make sure that no unauthorised persons are in the work area. Or it can cause a risk of dangerous injury. The safety distance is 15 m.

1. Put the stop switch to the start position.
2. Push the air purge bulb until fuel starts to fill the bulb.

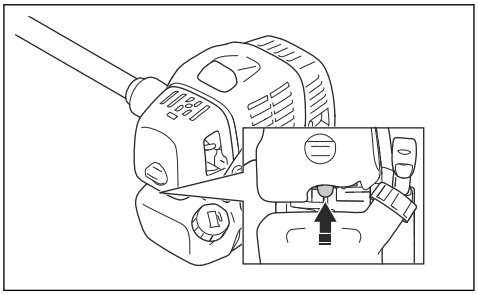

3. Move the choke control to the choke position.

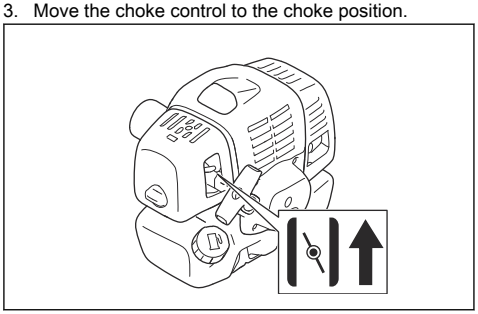

4. Hold the product to the ground. Pull out the starter rope slowly with your right hand until you feel some resistance.

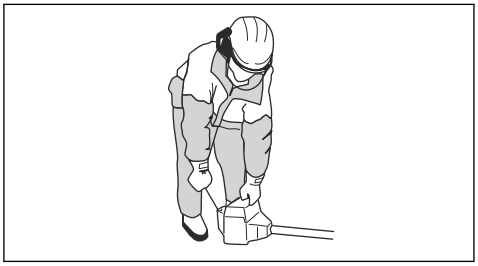

Note: Do not twist the starter rope around your hand.

CAUTION: Do not pull the starter rope to full extension. Hold the starter rope handle when it is fully extended. Failure to obey these instructions can cause damage to the engine.

5. Pull the starter rope quickly and with force until you hear that the engine starts.

6. Set the choke control to the run position.

WARNING: Do not touch the cover. It can burn your skin and cause electrical shock if the spark plug cap is damaged. Do not use a product with damaged spark plug cap.

To start a warm engine

1. Put the stop switch to the start position.
2. Push the air purge bulb until fuel starts to fill the bulb.

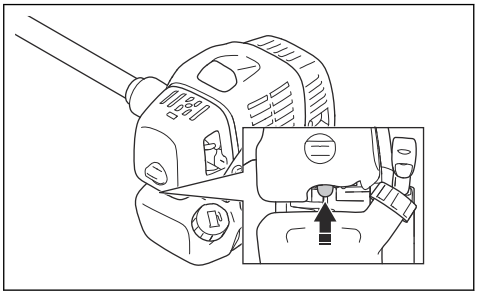

3. Set the choke control to the run position, then pull the start rope until the engine starts.

To start with a throttle handle with a start throttle lock

1. Push the throttle lockout and the throttle trigger to set the throttle to the start position. Then push the start throttle button (A).
2. Release the throttle lockout and the throttle trigger, followed by the start throttle button. The throttle function is now activated.
3. To return the engine to idle speed, push the throttle lockout and throttle trigger again.

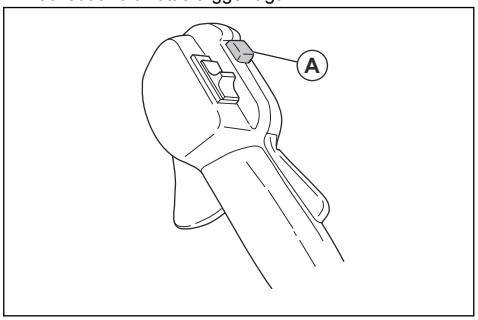

To stop the engine

1. Push the throttle trigger to the idle position.
2. Move the stop switch to the stop position.

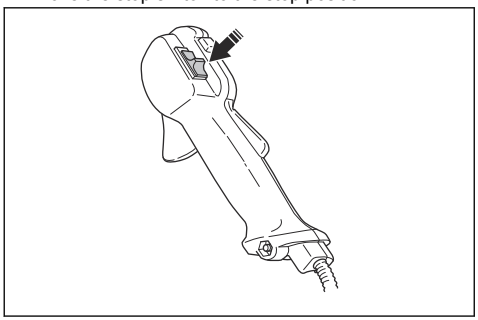

To operate the grass trimmer

CAUTION: Make sure that you slow the engine to idle speed after each operation. A long period at full throttle without a load on the engine can cause damage to the engine.

Note: Clean the cover of the trimmer head when you attach a new trimmer line to prevent vibrations. Examine other parts of the trimmer head and clean if it is necessary.

General work instructions

WARNING: Be careful when you cut a tree that is in tension. It can spring back to its normal position before or after the cut and hit you or the product, and cause injury.

- Clear an open space at one end of the work area, and start the work from there.
- Move in a regular pattern across the work area.

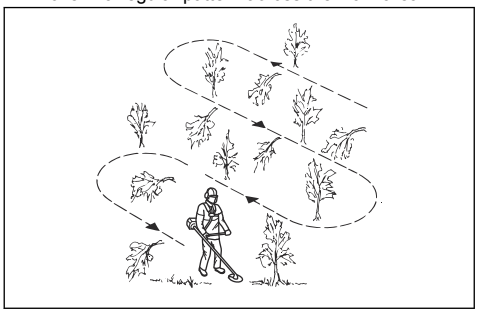

- Move the product fully to the left and right, to clear a width of 4–5 m (13-16 ft) on each turn.
- Clear a length of 75 m (250 ft) before you turn and go back. Move the fuel can along with you as you continue.
- Move in a direction where you do not go across ditches and obstacles more than necessary.

- Move in a direction where the wind makes the cut vegetation fall in the cleared area.

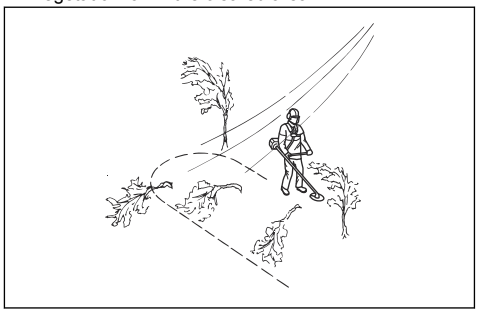

- Move along slopes, not up and down.

To clear grass with a grass blade

1. Keep your feet apart during operation of the product. Make sure feet are tightly against the ground.
2. Put the support cup lightly on the ground. This prevents the blade from touching the ground.
3. Use a sideway movement from right to left for a clear stroke. Use the left side of the blade (between 8 and 12 o'clock) to cut.

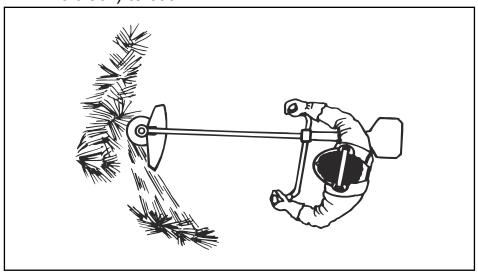

4. Angle the blade to the left when you clear grass.

Note: The grass collects easily in a line.

5. Use a sideway movement from left to right for the return stroke.
6. Do the work rhythmically.
7. Move forward and keep feet tightly against the ground.
8. Stop the engine.
9. Remove the product from the clip on the harness.
10. Put the product on the ground.
11. Collect the cut material.

To clear

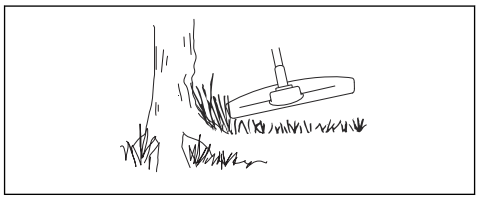

To achieve the best results:

- Hold the trimmer so that the trimmer head is just above the ground.
- Tilt the trimmer head at a slight angle.
- Let the end of the trimmer line strike the ground around objects.

To trim the grass

1. Hold the trimmer head immediately above the ground at an angle. Do not push the trimmer line into the grass.

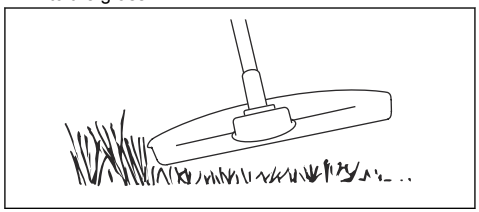

2. Decrease the length of the trimmer line by 10-12 cm / 4-4.75 in.
3. Decrease the engine speed to decrease the risk of damage to plants.
4. Use 80 % throttle when you cut grass near objects.

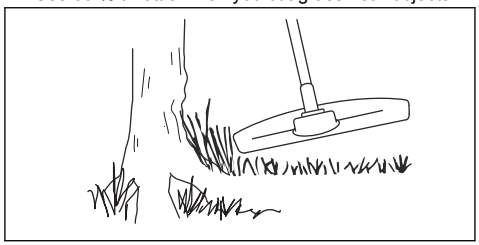

To cut the grass

1. Make sure that the trimmer line is parallel to the ground when you cut.

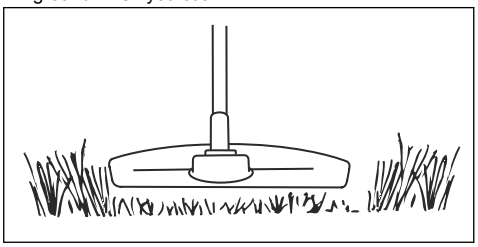

2. Do not push the trimmer head to the ground. The ground and the product can be damaged.
3. Do not let the trimmer head touch the ground continuously, it can cause damage to the trimmer head.
4. Use full throttle when you move the product from side to side to cut grass.

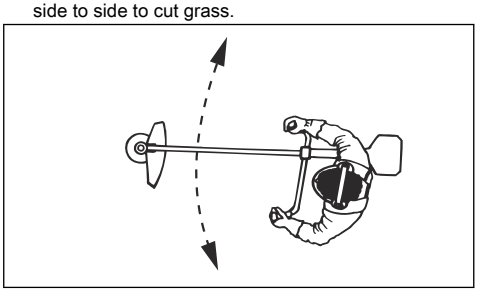

To sweep the grass

The airflow from the rotating trimmer line can be used to remove cut grass from an area.

1. Hold the trimmer head and its trimmer line parallel to the ground and above the ground.
2. Apply full throttle.
3. Move the trimmer head from side to side and sweep the grass.

WARNING: Clean the trimmer head cover each time you assemble new trimmer line to prevent unbalance and vibrations in the handles. Also do a check of the other parts of the trimmer head and clean it if necessary.

To replace trimmer line

Refer to the last page of this operator's manual.

Maintenance

WARNING: Read and understand the safety chapter before you clean, repair or do maintenance on the product.

Maintenance schedule

Maintenance	Daily	Weekly	Monthly
Clean the external surface.	X		
Examine the harness for damages.	X		
Do a check of the throttle and the throttle trigger.	X		
Make sure that the cutting attachment does not rotate at idle speed.	X		
Do a check of the stop switch. Refer to *To do a check of the stop switch on page 6*.	X		
Examine the cutting attachment guard for damages and cracks.	X		
Make sure that the grass blade is aligned with the center. Make sure that the grass blade is sharp and that the blade or center hole is not damaged.	X		

Maintenance	Daily	Weekly	Monthly
Examine the trimmer head for damages and cracks. Replace if it is damaged.	X		
Examine the handle and handlebar for damage and make sure that they are attached correctly.	X		
For cutting attachments with a support cup, tighten the locking screw correctly.	X		
For cutting attachments with a locknut, tighten the locknut correctly.	X		
Examine the transport guard for damage and make sure that it can be attached correctly.	X		
Examine the engine, the fuel tank and the fuel lines for leaks.	X		
Clean the air filter. Replace if it is necessary.	X		
Tighten nuts and screws.	X		
Examine the fuel filter for contamination and the fuel hose for cracks and other damages. Replace if it is necessary.	X		
Examine all cables and connections.	X		
Examine the starter and the starter rope for damages.		X	
Examine the spark plug. Refer to *To do a check of the spark plug on page 22*.		X	
Make sure that the bevel gear is filled to ¾ with grease.		X	
Clean the external surface of the carburetor and the area around it.		X	
Clean the spark plug. Remove the spark plug and do a check of the electrode gap. Adjust the electrode gap or replace the spark plug if it is necessary. Refer to *Technical data on page 24*. Make sure that the spark plug is assembled with a supressor.		X	
Examine the clutch, clutch springs and the clutch drum for wear. Replace if it is necessary.			X
Replace the spark plug. Make sure that the spark plug is assembled with a supressor.			X
Lubricate the drive shaft.			X
Make sure that the vibration damping units are not damaged.		X	
Clean the cooling system of the product.		X	
Clean the muffler.			X

To adjust the carburetor

The basic carburetor settings are adjusted during testing at the factory. Adjustment must be carried out by a trained technician.

To do a check of the muffler

WARNING: Do not use a product that has a damaged muffler. Always replace a damaged muffler.

WARNING: Risk of burn injury or fire. Mufflers with catalytic converters become very hot during operation.

WARNING: Risk of fire. The muffler decreases the noise level and points the exhaust gases away from the operator. The exhaust gases are hot and can contain sparks.

CAUTION: The spark arrester screen must be replaced if it is damaged. Do not use a product if the spark arrester screen on the muffler is missing or damaged.

CAUTION: If the spark arrester screen is blocked, the product becomes very hot and this causes damage to the cylinder and piston.

1. Make sure that the muffler is not damaged.
2. Make sure that the muffler is correctly attached to the product.

To adjust the idle speed

Your Husqvarna product is made to specifications that decrease harmful emissions.

1. Make sure that the air filter is clean and the air filter cover is attached before you adjust the idle speed.
2. Adjust the idle speed with the idle speed screw T which is identified with "T" mark.
   a) Turn the idle speed screw T clockwise until the cutting attachment starts to rotate.

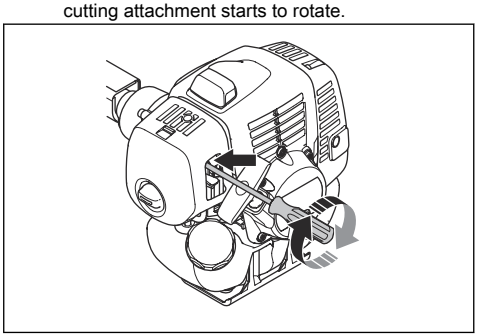

   b) Turn the idle speed screw T counterclockwise until the cutting attachment stops and the noise from the clutch decreases.

WARNING: If the cutting attachment does not stop when you adjust the idle speed, speak to your servicing dealer. Do not use the product until it is correctly adjusted or repaired.

3. The idle speed is correct when the engine operates smoothly in all positions. The idle speed must be below the speed when the cutting attachment starts to rotate.

Note: Refer to *Technical data on page 24* for the recommended idle speed.

Cooling system

The product has a cooling system to keep the work temperature low.

The cooling system has:

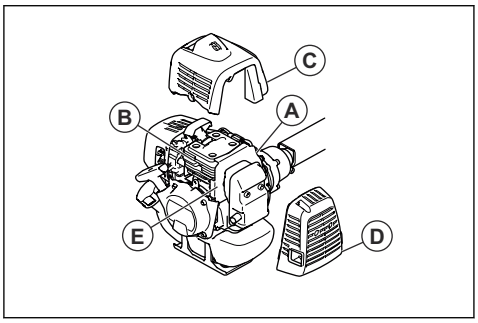

- Fins on the flywheel (A)
- Cooling fins on the cylinder (B)
- Cylinder cover (C) (directs cold air over the cylinder)
- Muffler cover (D)
- Muffler plate (E)

To clean the cooling system

WARNING: A dirty or blocked cooling system causes overheating. It causes damage to the piston and cylinder.

1. Clean the parts of the cooling system with a brush a minimum of one time a week.

Air filter

- Clean the filter at intervals of 25 hours. Clean more regularly if necessary.
- Set the choke control in the choke position.

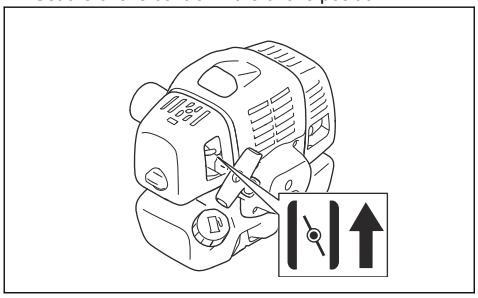

To clean the air filter

CAUTION: Always replace an air filter that is damaged, very dirty or soaked with fuel.

If you use an air filter for a long time, it cannot be fully cleaned. Replace the air filter with a new one at regular intervals.

1. Close the choke valve.

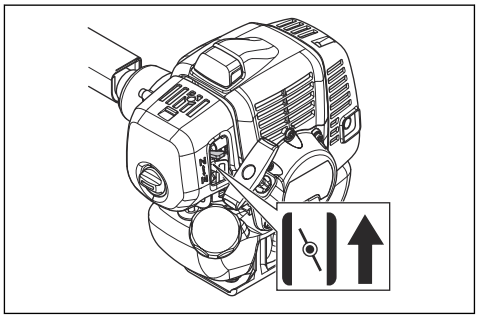

2. Remove the air filter cover.

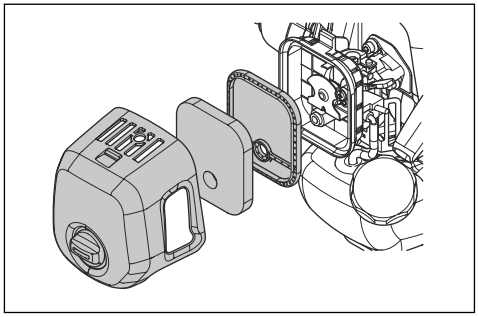

3. Remove the air filter.
4. Clean the air filter with warm soap water.
5. Replace the air filter if it is too dirty to fully clean it. Always replace a damaged air filter.
6. Clean the inner surface of the air filter cover. Use air or a brush.
7. Make sure that the air filter is dry.
8. Use Husqvarna two-stroke oil to put oil on the air filter. If there is too much oil on the air filter, remove the unwanted oil before you install the air filter.

To apply oil to the foam air filter

CAUTION: Always use Husqvarna special air filter oil. Do not use other types of oil.

WARNING: Put on protective gloves. The air filter oil can cause skin irritation.

1. Put the foam air filter in a plastic bag.
2. Put the oil in the plastic bag.
3. Rub the plastic bag to supply the oil equally across the foam air filter.
4. Push the unwanted oil out of the foam air filter while in the plastic bag.

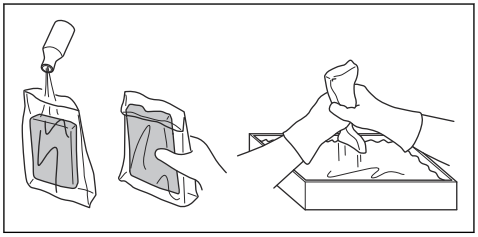

Felt filter

- Hit the felt filter carefully against your hand or use compressed air to clean the felt filter.

CAUTION: Do not use water to clean the felt filter. Water can cause damage to the felt filter.

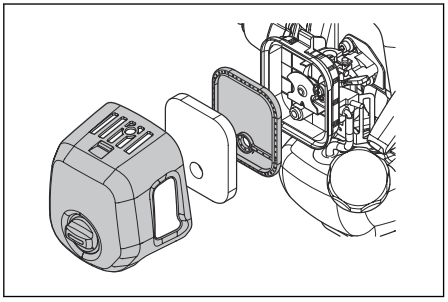

Fuel filter

When the engine runs short of fuel supply, make sure that the fuel tank cap and the fuel filter (A) is not blocked.

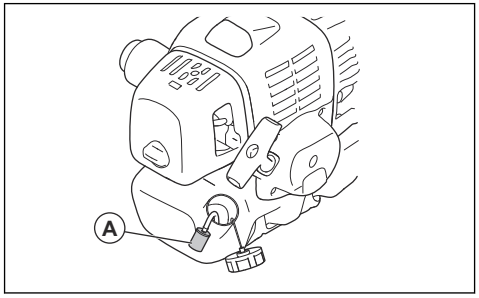

To add grease to the bevel gear

- Make sure that the bevel gear is filled ¾ full with bevel gear grease.

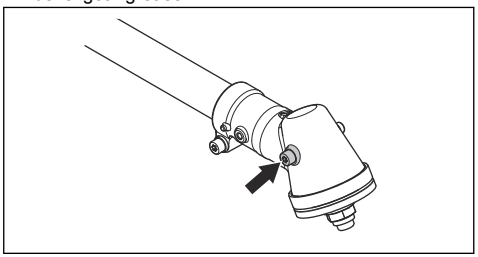

To do a check of the spark plug

CAUTION: Always use the recommended spark plug type. Incorrect spark plug type can cause damage to the product.

- Do a check of the spark plug if the engine is low on power, is not easy to start or does not operate correctly at idle speed.
- To decrease the risk of unwanted material on the spark plug electrodes, obey these instructions:
  a) Make sure that the idle speed is correctly adjusted.
  b) Make sure that the fuel mixture is correct.
  c) Make sure that the air filter is clean.
- If the spark plug is dirty, clean it and make sure that the electrode gap is correct, refer to *Technical data on page 24*.

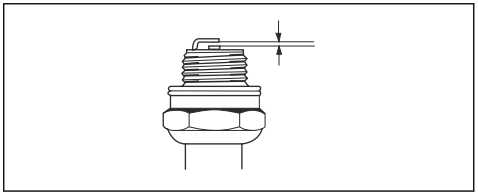

- Replace the spark plug if it is necessary.

To sharpen grass cutters and grass blades

- Sharpen all edges of the grass cutters and blades equally to keep the balance. Use a single-cut flat file.

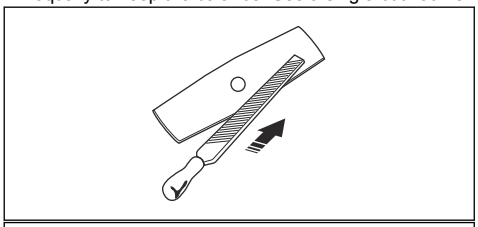

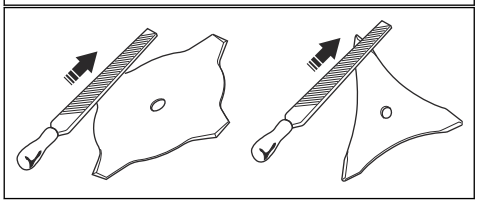

Troubleshooting

Troubleshooting

Starting failure		
Check	**Possible cause**	**Solution**
Stop button	Stop position	Set the stop switch to the start position.

Starting failure		
Check	**Possible cause**	**Solution**
Starter pawls	Binding pawls	Adjust or replace the pawls.
		Clean around the pawls.
		Speak to an approved servicing dealer.
Fuel tank	Incorrect fuel type.	Drain it and use correct fuel.
Carburetor	Adjustment of the idle speed.	Adjust the idle speed with the T screw.
Spark (no spark)	Spark plug dirty or wet.	Make sure that the spark plug is dry and clean.
	Spark plug clearance incorrect.	Clean the spark plug. Check that the electrode gap is correct. Make sure that the spark plug is installed with a supressor.
		Refer to technical data for correct electrode gap.
Spark plug	Spark plug loose.	Tighten the spark plug.
Fuel filter	Clogged fuel filter.	Replace the fuel filter.

Engine starts but does not stay running		
Check	**Possible cause**	**Solution**
Fuel tank	Incorrect fuel type.	Drain it and use correct fuel.
Carburetor	Engine will not idle correctly.	Speak to your servicing dealer.
Air filter	Clogged air filter.	Clean the air filter.
Fuel filter	Clogged fuel filter.	Replace the fuel filter.

Transportation and storage

- Keep equipment safe during transportation to prevent damage and accidents.
- Keep the product and equipment in a dry and frost-proof area.
- Clean the product.
- Replace or repair damaged components.
- Use the correct protective cover on the product that does not keep moisture.
- Keep the product tightly attached during transport.

Technical data

	531RS	541RS	541RST
Engine			
Cylinder displacement, cm^3	33.6	41.5	41.5
Cylinder diameter, Ø mm	36	40	40
Cylinder stroke length, mm	33	33	33
Idle speed, min^{-1} (rpm)	2500±200	2500±200	2500±200
Recommended max. speed, min^{-1} (rpm)	12000	12000	12000
Speed of output shaft, min^{-1} (rpm)	8570	8570	8570
Max. engine output, according to ISO 8893, kW @ min^{-1} (rpm)	1.2/1.6 @ 7000	1.6/2.1 @ 7000	1.6/2.1 @ 7000
Catalytic converter muffler	No	No	No
Ignition system			
Spark plug	NGK BPMR7A	NGK BPMR7A	NGK BPMR7A
Electrode gap, mm	0.6-0.7	0.6-0.7	0.6-0.7
Fuel and lubrication system			
Fuel tank capacity, l	0.74	0.94	0.94
Weight			
Without cutting attachment, cutting attachment guard, harness and with empty tanks, kg	7.2	7.4	7.6
Noise emissions [1]			
Sound power level, measured dB(A)	104	105	105
Sound power level, guaranteed L_{WA} dB(A)	109	109	109
Noise levels [2] Equivalent sound pressure level at the operator's ear, measured according to EN ISO 11806 and ISO 22868, dB(A).			
Equipped with trimmer head (original)	90	94	94
Equipped with grass blade (original)	89	95	95

[1] Noise emissions in the environment measured as sound power (L_{WA}) in conformity with EC directive 2000/14/EC. Reported sound power level for the machine has been measured with the original cutting attachment that gives the highest level. The difference between guaranteed and measured sound power is that the guaranteed sound power also includes dispersion in the measurement result and the variations between different machines of the same model according to Directive 2000/14/EC.

[2] Reported data for equivalent sound pressure level has a typical statistical dispersion (standard deviation) of 3 dB (A).

	531RS	541RS	541RST
Vibration levels [3] Equivalent vibration levels ($a_{hv,eq}$) at handles, measured according to EN ISO 11806 and ISO 22867, m/s^2			
Equipped with trimmer head (original), left/ right	2.8/3.0	3.1/2.8	5.6/5.1
Equipped with grass blade (original), left/right	4.2/4.0	4.5/5.0	7.1/6.3

Accessories

Accessories

Approved accessories	Accessory type	Cutting attachment guard, art. no.
Grass blade/grass cutter	Multi 255-3 (Ø 255, 3 teeth)	584 40 42-01
	Multi 275-4 / Grass 275-4T (Ø 275, 4 teeth)	584 40 42-01
	Multi 300-3 (Ø 300, 3 teeth)	584 40 42-01
	Multi 330-2 / Grass 330-2T (Ø 330, 2 teeth)	584 40 42-01
Plastic blades	Tricut Ø 300 mm (Separate blades have part number 531 01 77-15)	584 40 42-01
Trimmer head	T35, T35X (Ø 2.4-3.0 mm cord)	584 40 42-01
	S35 (Ø 2.4-3.0 mm cord)	584 40 42-01
	T45, T45x (Ø 2.7-3.3 mm cord)	584 40 42-01
	T55x (Ø 2.7-3.3 mm cord)	584 40 42-01
	S II	584 40 42-01
Support cup	Fixed	–

[3] Reported data for vibration level has a typical statistical dispersion (standard deviation) of 1.5 m/s^2.

Declaration of Conformity

We, Husqvarna, SE-561 82 Huskvarna, Sweden, tel: +46-36-146500, declare on our sole responsibility that the product:

Description	Grass Trimmer / Brushcutter
Brand	Husqvarna
Type / Model	531RS, 541RS and 541RST
Identification	Serial numbers dating from 2025 and onwards

is in conformity with the following EU directives and regulations as amended:

Directive / Regulation	Description
2006/42/EC	"relating to machinery"
2014/30/EU	"relating to electromagnetic compatibility"
2000/14/EC	”relating to the noise emissions in the environment”
2011/65/EU	“on the restriction of the use of certain hazardous substances in electrical and electronic equipment”

and that the following standards and/or technical specifications are applied: EN ISO 11806-1:2022, EN ISO 14982:2009, EN ISO 12100:2010, EN IEC 63000:2018.

For information relating to noise emissions, refer to *Technical data on page 24*.

TÜV Rheinland LGA Products GmbH, Tillystrasse 2, D-90431 Nuernberg, Germany, 0197, has carried out a voluntary examination on behalf of Husqvarna AB, providing AM 50609261(541RS, 541RST), AM 50609279(531RS) - Certificate of Conformity to EC Council directive 2006/42/EC for machinery. This certificate is applicable to all manufacturing locations and Countries of Origin, as stated on the product. The supplied grass trimmer / brushcutter conforms to the example that underwent examination.

2025-06-04

Claes Losdal, Development Manager/Garden Products,

Responsible for technical documentation.

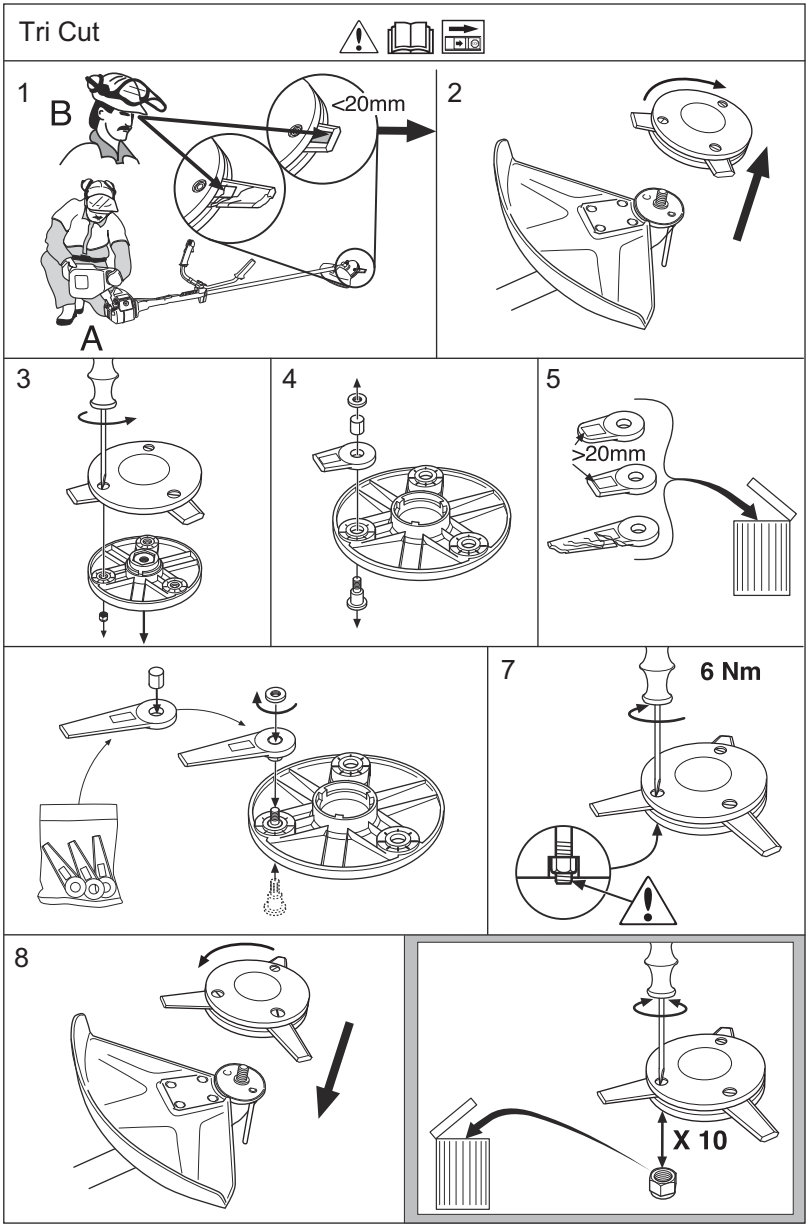
Tri Cut
1
B
A
<20mm
2
3
4
5
>20mm
7
6 Nm
8
X 10

S35

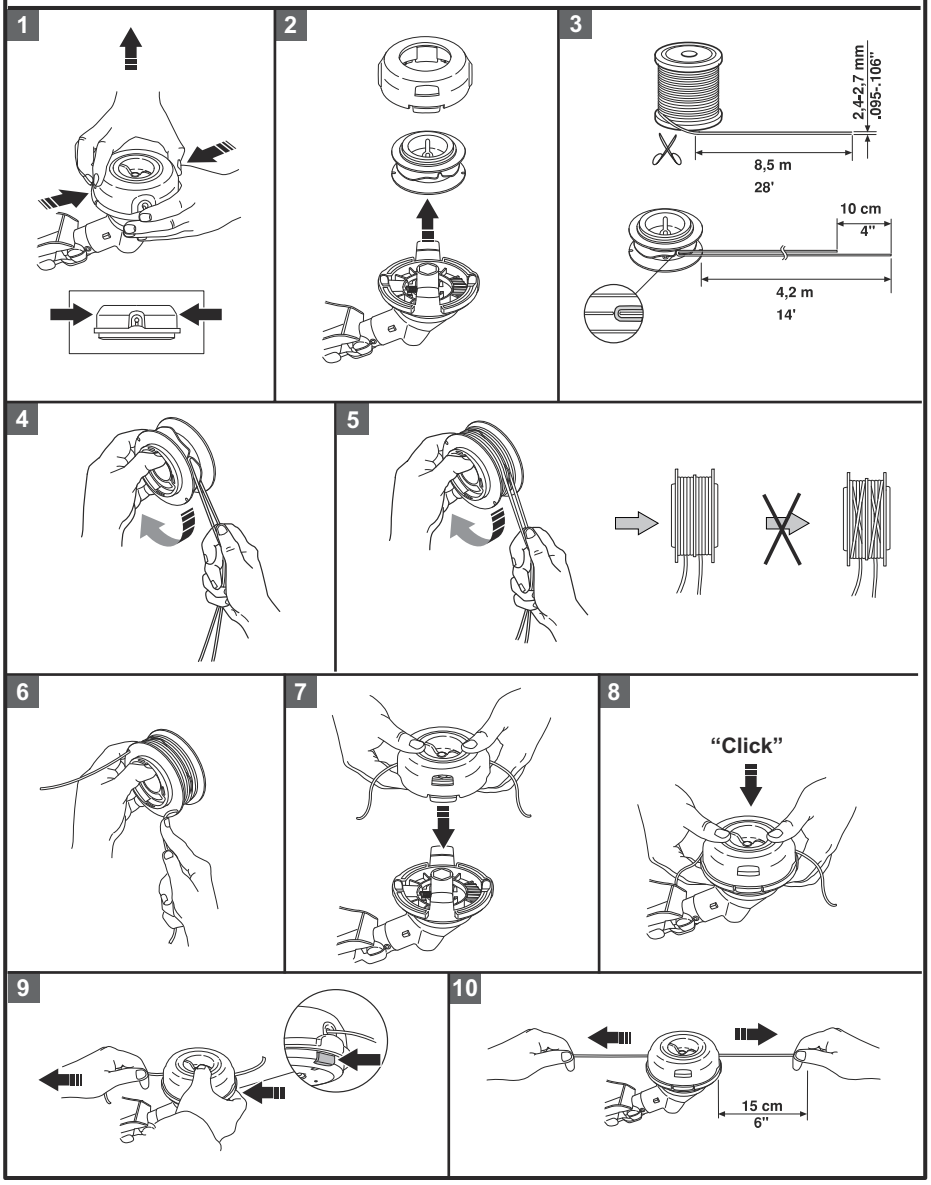

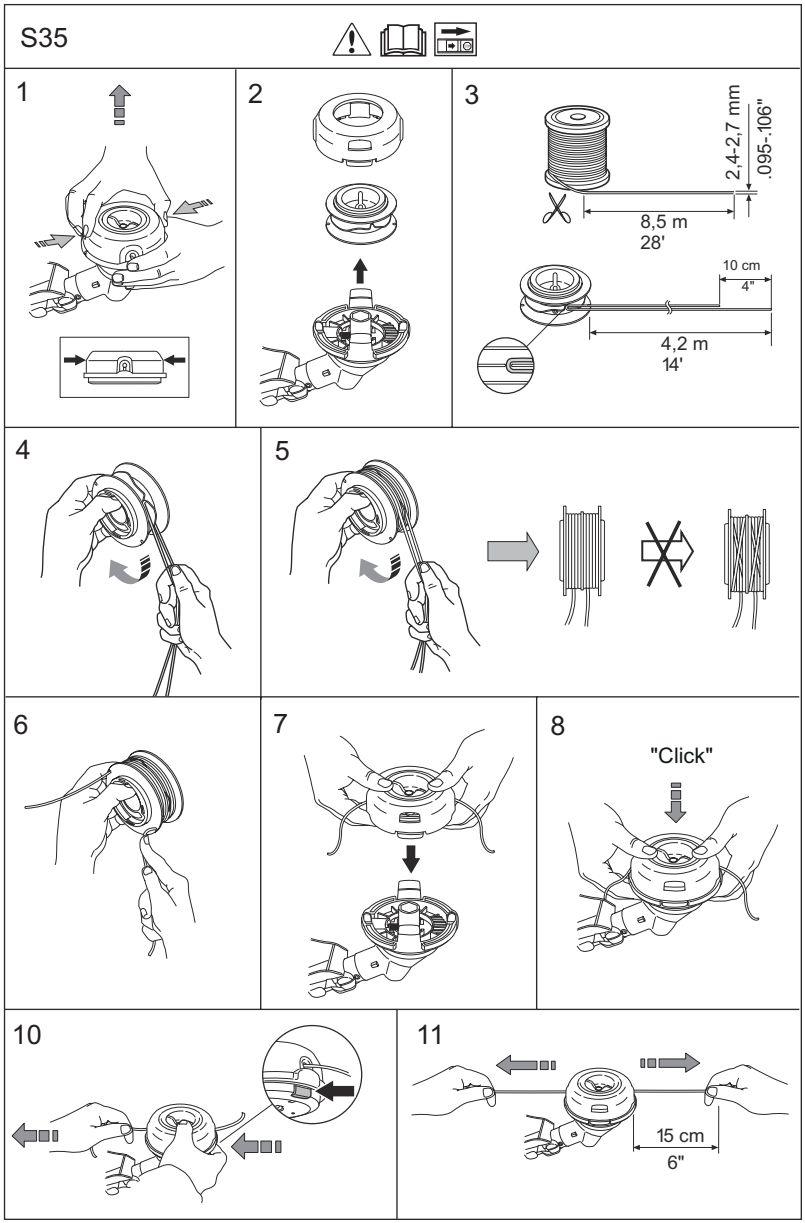
S35
1
2
3
2,4-2,7 mm
.095-.106"
8,5 m
28'
10 cm
4"
4,2 m
14'
4
5
6
7
8
"Click"
10
11
15 cm
6"

T35, T35x

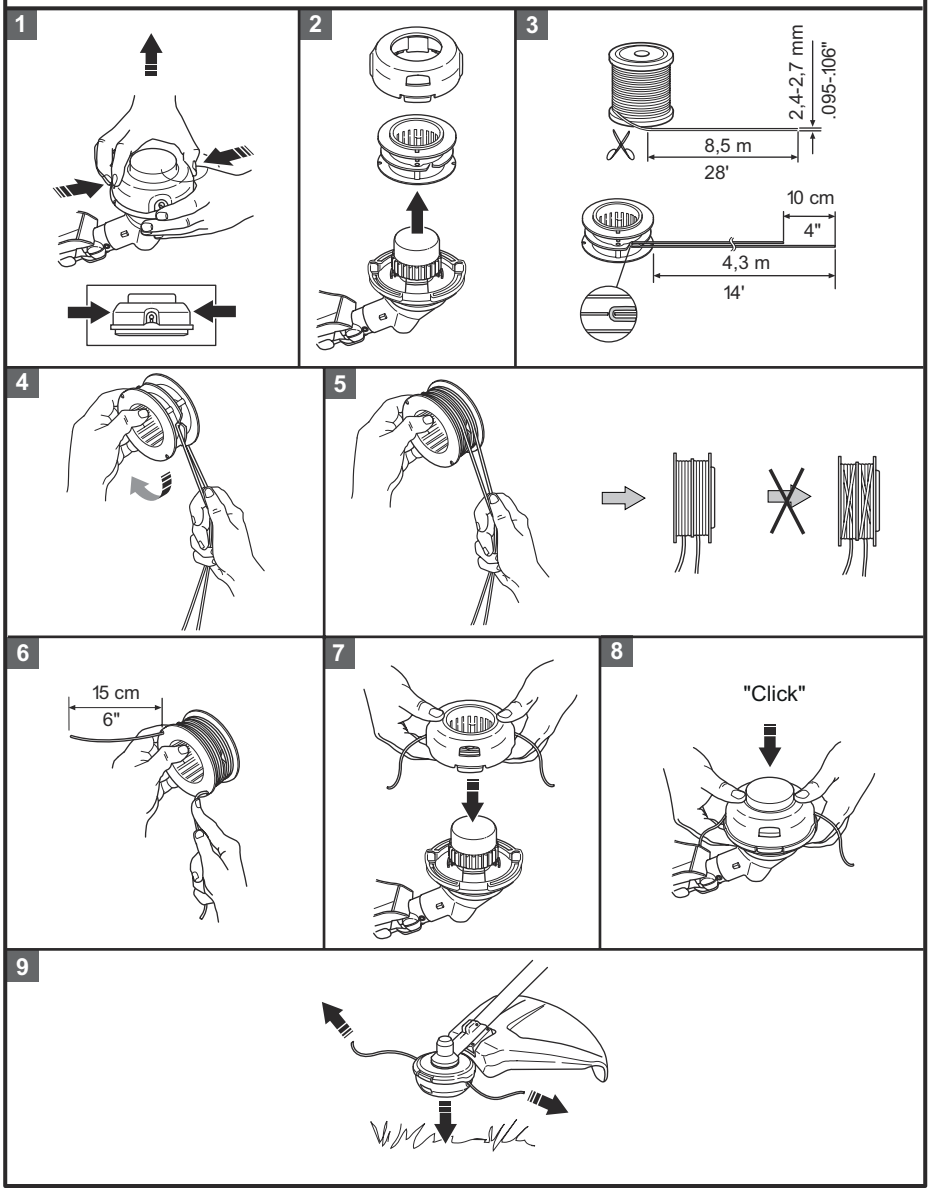

T45, T45x

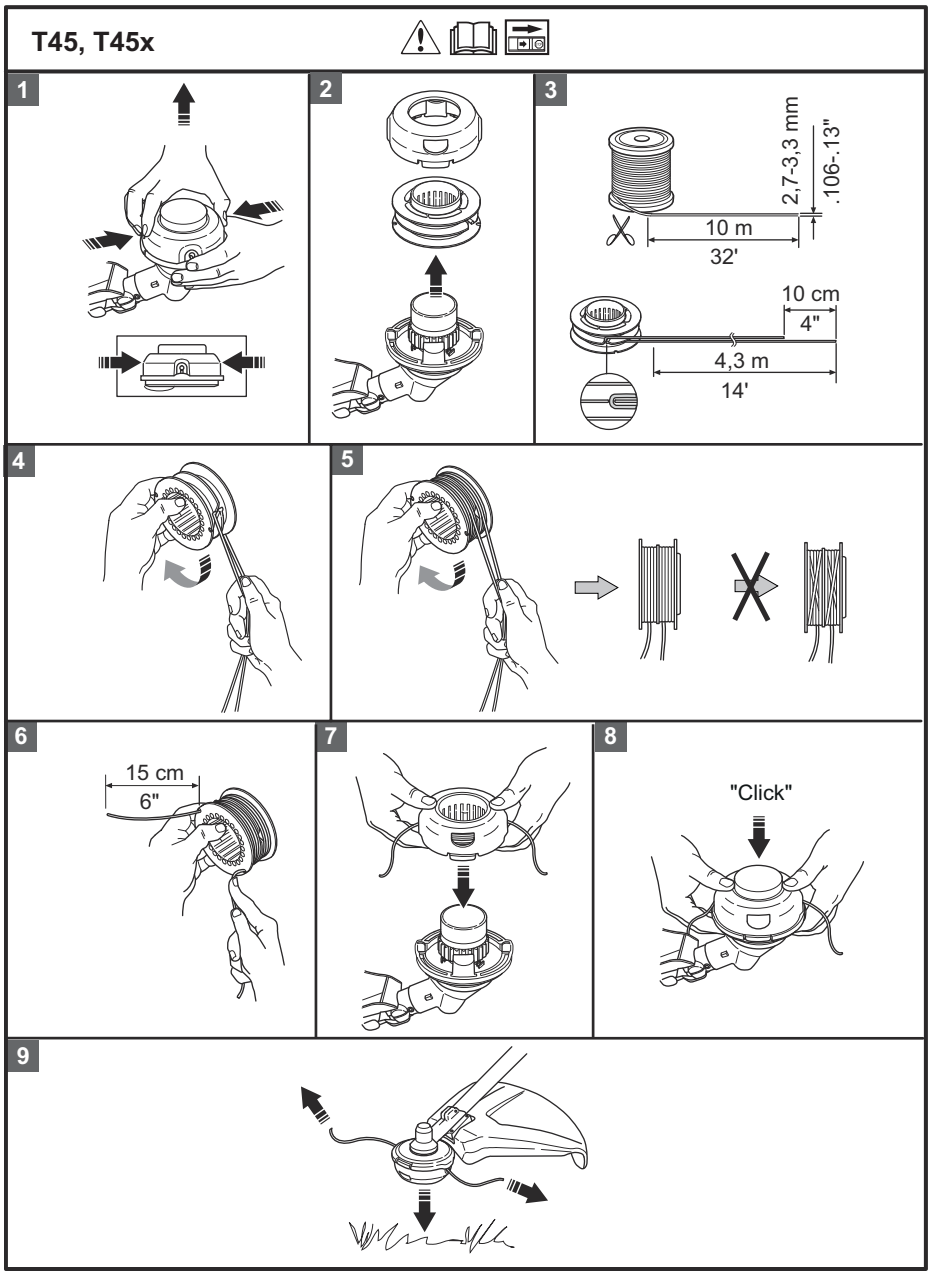

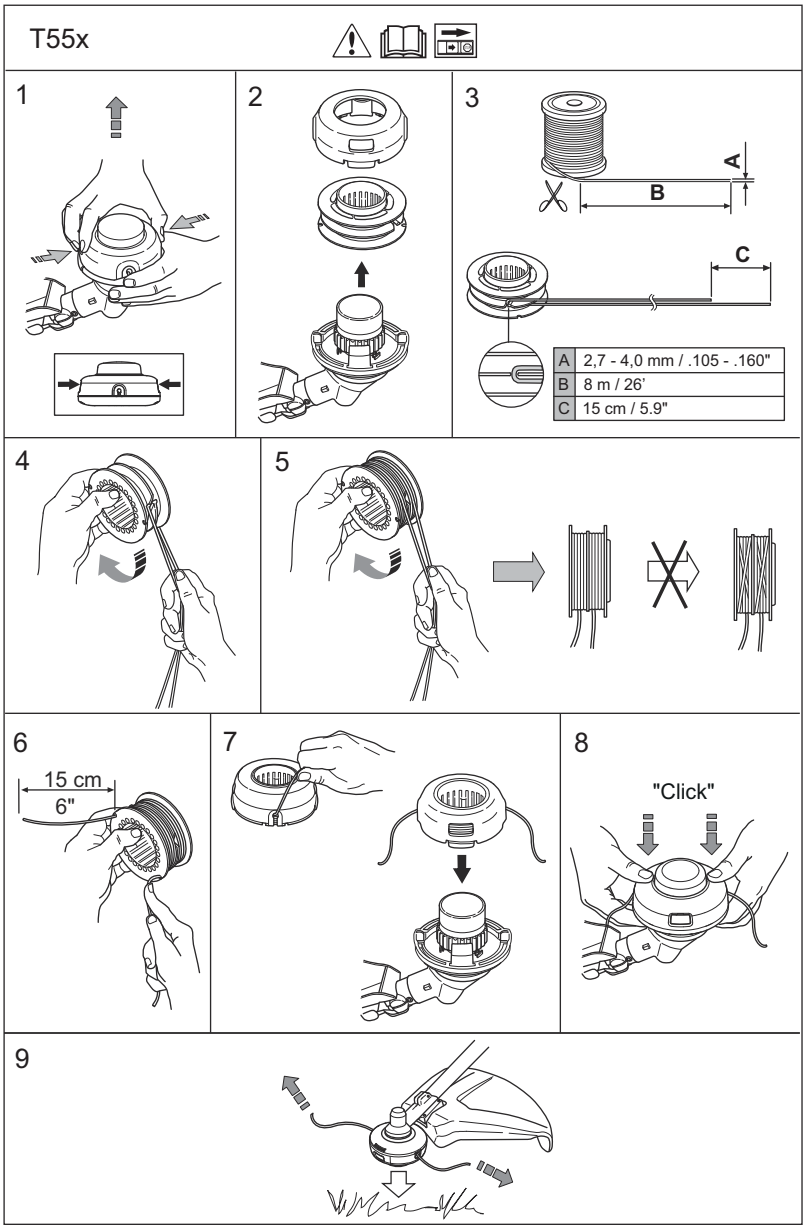
T55x
1
2
3
A
B
C
A 2,7 - 4,0 mm / .105 - .160"
B 8 m / 26'
C 15 cm / 5.9"
4
5
6
15 cm
6"
7
8
"Click"
9

Trimmy SII

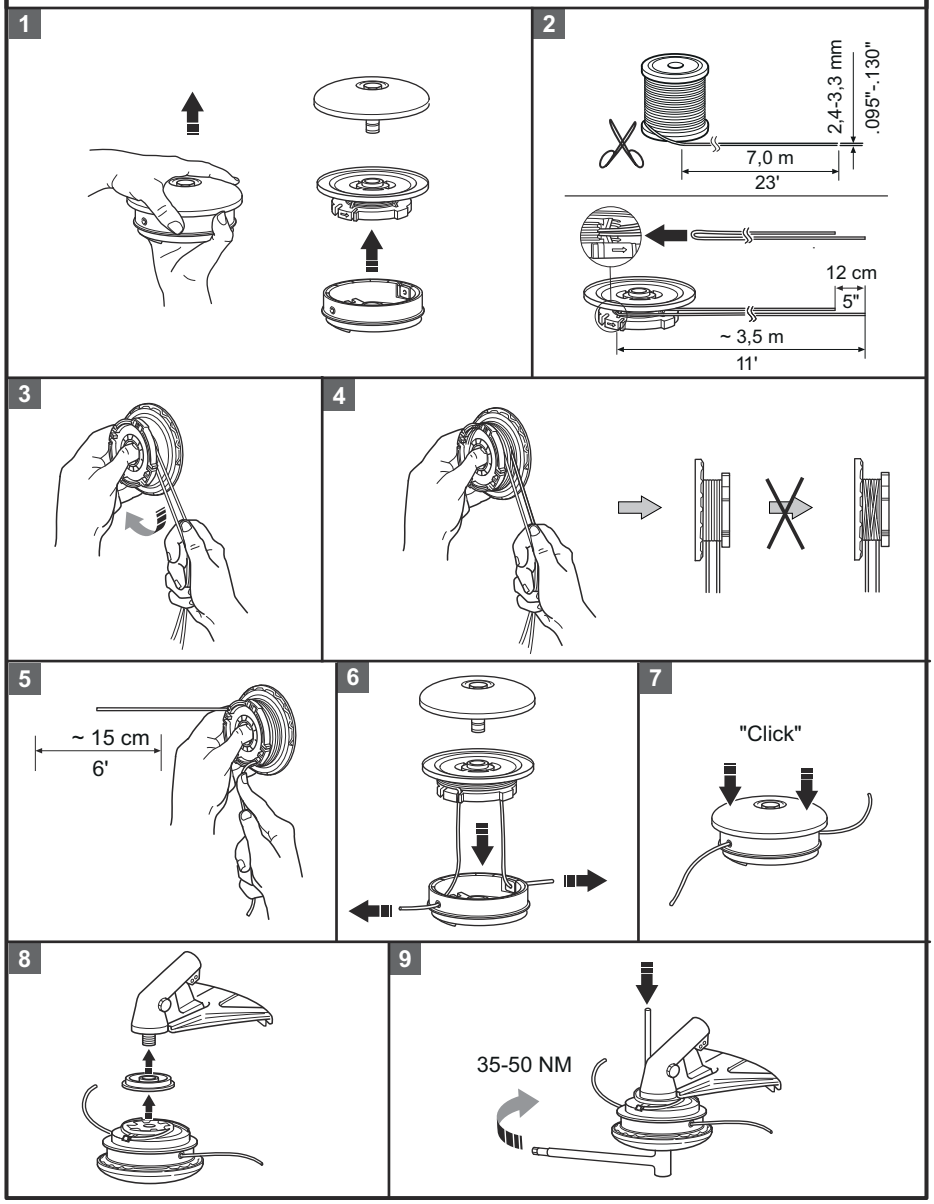
1
2
2,4-3,3 mm
.095"-.130"
7,0 m
23'
12 cm
5"
~ 3,5 m
11'
3
4
5
~ 15 cm
6'
6
7
"Click"
8
9
35-50 NM

Trimmy SII

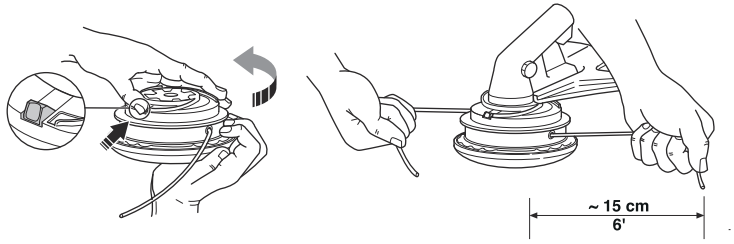

1

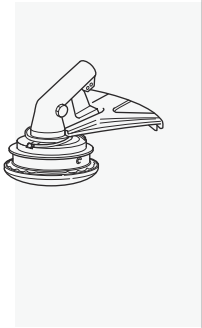

2

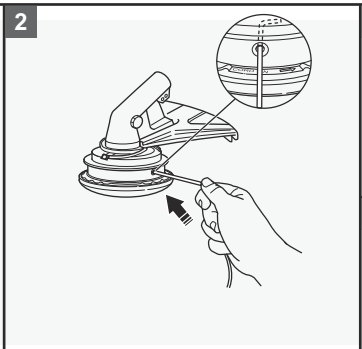

3

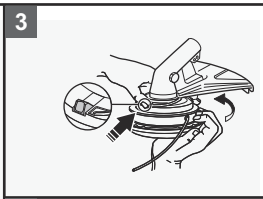

4

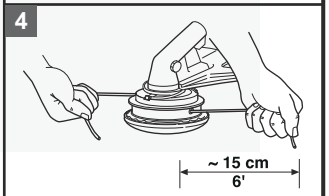

Husqvarna®

www.husqvarna.com

Original instructions

1144721-26 Rev. A

2025-07-01